REVISIONS				
ZONE	LTR	DESCRIPTION	DATE	APPROVED

DUST COVER
REMOVED FOR CLARITY

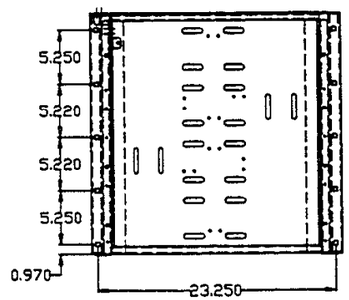

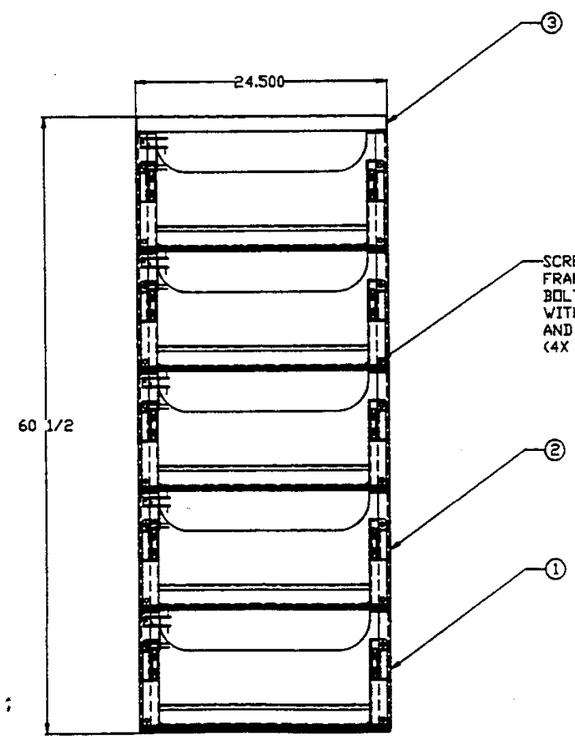

SCREW DRAWER TO
FRAME USING #3/8-16
BOLTS (GRD. 5) X 1" LG.
WITH A #3/8" LOCKWASHER
AND A #3/8" FLATWASHER
(4X PER SHELF)

ASSEMBLE SHELVES AND DUST COVER
USING THE FOLLOWING HARDWARE PER SHELF:
#3/8-16 X 1"LG. (GRD.#5) CARRIAGE BOLT (10X)
#3/8 FLATWASHER (10X)
#3/8 LOCKWASHER (8X)
#3/8 "SHAKEPROOF" WASHER (2X)(REAR HOLES)
#3/8-16 (GRD.#5) HEX NUT (10X)

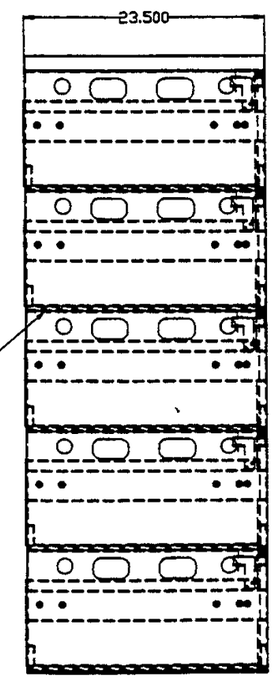

NOTES:
FINISH-EPOXY POWDER, ASA 61 GREY

ASSEMBLY IS QUALIFIED AND
CERTIFIED FOR UBC SEISMIC ZONE 4

COVER INCLUDES RELAY RACK MOUNTING
HOLES

■ BATTERY HOLDOWNS AS REQ.

THIS DOCUMENT CONTAINS PROPRIETARY DATA OF SNFI AND JCI. NO DISCLOSURE, REPRODUCTION, OR USE OF ANY PART THEREOF MAY BE MADE WITHOUT WRITTEN PERMISSION. THIS IS A CAD GENERATED DRAWING. NO MANUAL CHANGES ALLOWED.

BILL OF MATERIALS

QTY	ITEM	PART NUMBER	DESCRIPTION
■ 20	5	MHD70-90	BATTERY HOLDOWN (NOT SHOWN)
■ 10	4	MHD30-45	BATTERY HOLDOWN (NOT SHOWN)
1	3	MRDC-S	DUST COVER
4	2	MRT-S	Z-4 SLIDING BATTERY SHELF-TIER
1	1	MRB-S	Z-4 SLIDING BATTERY SHELF-BASE

NEXT ASSY	USED ON
APPLICATION	

UNLESS OTHERWISE SPECIFIED DIMENSIONS ARE IN INCHES
TOLERANCES: FRACTIONS ±1/16
ANGLES ± 1 DEG.
2 PLACE DECIMALS ± .010
3 PLACE DECIMALS ± .005

MATERIAL: AS NOTED

FINISH: AS NOTED

CONTR.
DRAWN RVG 6/18/97
CHECKED
APPROVED
APPROVED
DSGN ACT APPVL
GOV'T ACT APPVL

JOHNSON CONTROLS, INC.
SPECIALTY BATTERY

(TEL12-30/12-90) Z-4 MODULAR
SINGLE BAY SYSTEM - 5 TIER

SIZE	CODE IDENT NO.	DRAWING NO.	REV.
D		SBMS-5T	-

SCALE: SHEET 1 OF 1