REVISIONS				
ZONE	LTR	DESCRIPTION	DATE	APPROVED

BATTERY TRAY
NOT SHOWN IN
THE TOP VIEW

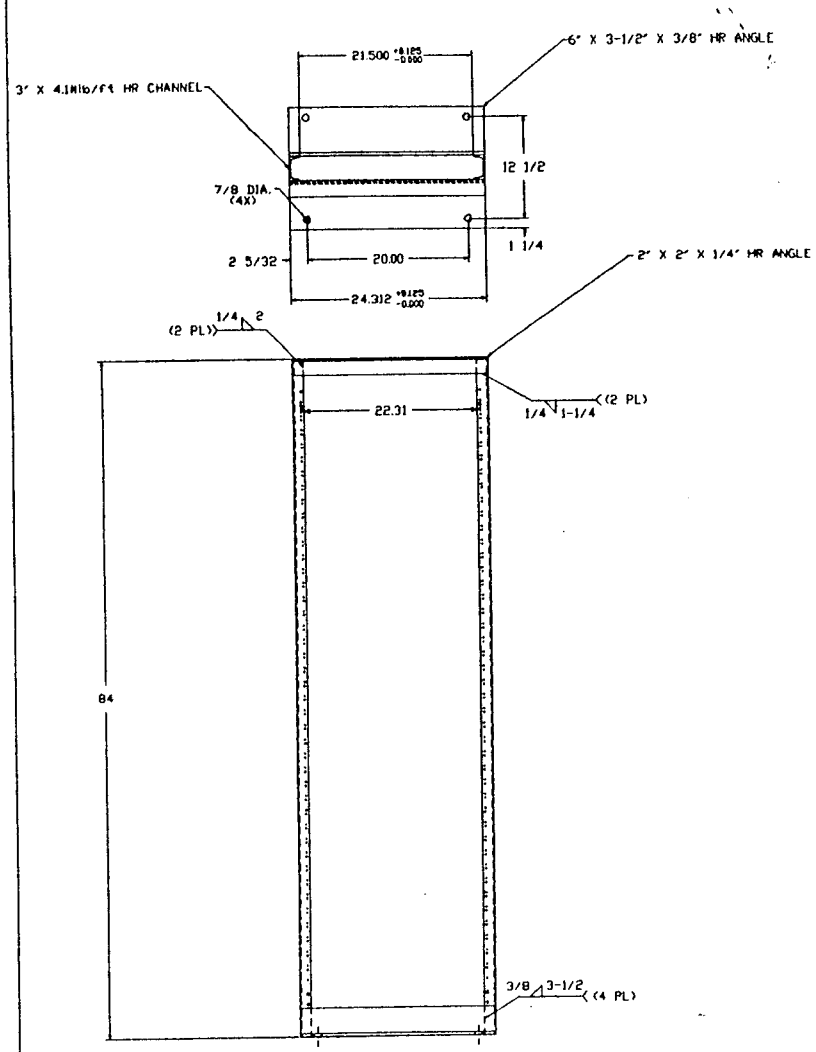

FRONT VIEW

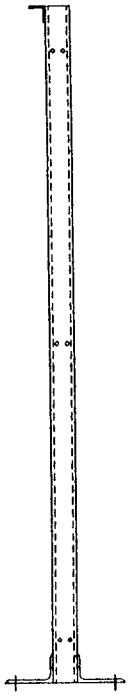

RIGHT SIDE VIEW

DETAIL A

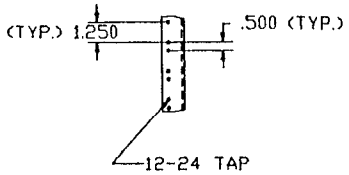

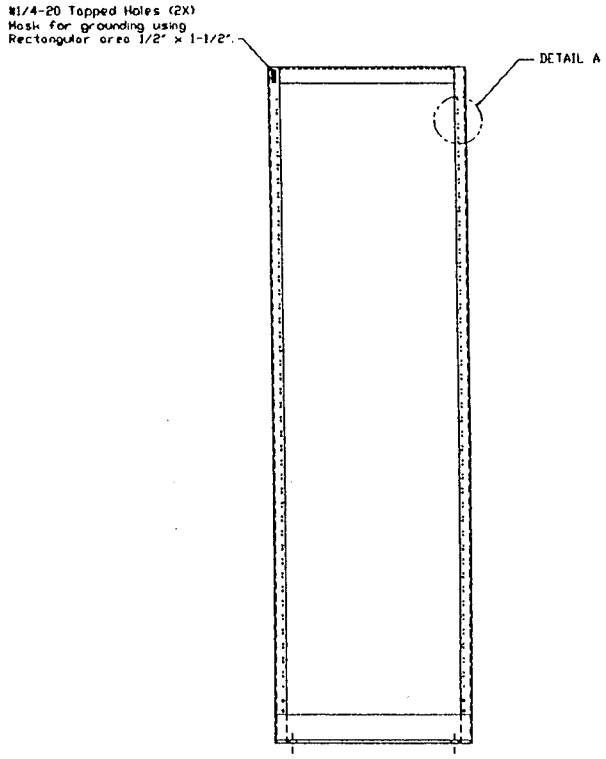

REAR VIEW

THIS DOCUMENT CONTAINS PROPRIETARY DATA OF SPECIALTY METAL FABRICATIONS INC. NO DISCLOSURE, REPRODUCTION, OR USE OF ANY PART THEREOF MAY BE MADE WITHOUT WRITTEN PERMISSION. THIS IS A CAD GENERATED DRAWING NO MANUAL CHANGES ALLOWED

UNLESS OTHERWISE SPECIFIED DIMENSIONS ARE IN INCHES	CONTR.	JOHNSON CONTROLS, INC. SPECIALTY BATTERY	
TOLERANCES (FRACTIONS ±1/16) ANGLES ±1 DEG. 3 PLACE DECIMAL ± .005 2 PLACE DECIMAL ± .030	DRAWN JERG 8/18/97	RELAY RACK ASSEMBLY, 3" CHANNEL-84" HIGH	
	CHECKED		
MATERIAL: AS NOTED	APPROVED		
	APPROVED		
	DSGN ACT APPVL	SIZE C / CODE IDENT NO / DRAWING NO. RR2373 / REV.	
NEXT ASSY / USED ON	FINISH: AS NOTED		
APPLICATION	GOV'T ACT APPVL	SCALE: NONE	SHEET 1 OF 1